ITEM #

MODEL #

NAME #

SIS #

AIA #

Food Processor
Cutter mixer 3.6 lt s/s bowl

602263 (DK36AU) Cutter mixer 3.6 lt with stainless steel bowl, 1500 rpm - Australia

Short Form Specification

Item No.

Table top Cutter Mixer. 3,6 litres, stainless steel bowl with scraper and central feed hole for adding products in mid-cycle. Transparent copolyester lid. Microtoothed blade rotor. Angled blades and conical base of the bowl ensure consistent mixing. All ingredients are processed evenly and quickly thanks to a special flow generated inside the bowl. No-volt release system prevents accidental start of the appliance. All parts in contact with food are removable and Dishwasher safe. Waterproof, easy to clean, flat, soft-touch buttons. Single speed 1500 rpm with on/pulse/off function for simple operations. Australia

APPROVAL:

Main Features

- Tabletop cutter mixer and emulsifier allowing fast chopping, mixing, mincing, griding, liquidizing and kneading.
- Includes 3,6 liter stainless steel bowl with micro-toothed blades rotor.
- Bowl/lid scraper included for uniform smooth results (emulsifying) and continuous working.
- Transparent lid, with funnel shaped hole, to add ingredients during use.
- All ingredients are processed evenly and quickly thanks to a special movement generated inside the bowl.
- Easy to clean and waterproof control panel with flat on/off button and pulse function.
- Pulse function for coarse chopping.
- All parts in contact with food are removable without the use of tools, completely dismountable and dishwasher safe.
- ErgoCert 4-star certification for ergonomic design and ease of use.
- Productivity up to 50 settings per service.

Construction

- Food safety assured in accordance to European directives and UK legislation. In addition, materials in contact with food, are BPA-free.
- Product safety conform to European directives, UK legislation and international health and safety standards.
- 1 speed: 1.500 rpm.
- Power: 500 Watts.
- Bowl in AISI 304 stainless steel.
- Micro-toothed blades in 420 AISI stainless steel and ergonomic scraper in resistant composite material to ensure consistent mixing.
- compact design, easy to move and store.
- IPX5 (IP55) waterproof, flat, touch-control panel.
- Main switch ON/OFF on the back of the appliance.
- Asynchronous industrial motor with no brushes for high reliability and quiet functioning, stainless steel motor shaft.

Food Processor
Cutter mixer 3.6 lt s/s bowl

Included Accessories

- 1 of TRANSPARENT LID (WITHOUT SEALING) FOR 3,6LT CUTTER MIXER BOWL PNC 650118
- 1 of MICROTOOTHED BLADE ROTOR FOR 3.6LT CUTTER MIXER PNC 650233
- 1 of STAINLESS STEEL BOWL FOR 3.6LT CUTTER MIXER PNC 650235
- 1 of SCRAPER FOR 3.6LT CUTTER BOWL PNC 650236

Optional Accessories

- TRANSPARENT LID FOR 2,6LT CUTTER MIXER BOWL PNC 650117 ❑
- TRANSPARENT LID (WITHOUT SEALING) FOR 3,6LT CUTTER MIXER BOWL PNC 650118 ❑
- MICROTOOTHED BLADE ROTOR FOR 2.6LT CUTTER MIXER PNC 650226 ❑
- SMOOTH BLADE ROTOR FOR 2.6LT CUTTER MIXER PNC 650227 ❑
- STAINLESS STEEL BOWL FOR 2,6 LT CUTTER MIXER PNC 650228 ❑
- TRANSPARENT COPOLYESTER BOWL FOR 2,6 LT CUTTER MIXER PNC 650229 ❑
- SCRAPER FOR 2.6LT CUTTER MIXER BOWL PNC 650230 ❑
- STAINLESS STEEL BOWL FOR 2,6LT CUTTER MIXER, MICROTOOTHED ROTOR, LID WITH SCRAPER PNC 650231 ❑
- MICROTOOTHED BLADE ROTOR FOR 3.6LT CUTTER MIXER PNC 650233 ❑
- SMOOTH BLADE ROTOR FOR 3.6LT CUTTER MIXER PNC 650234 ❑
- STAINLESS STEEL BOWL FOR 3.6LT CUTTER MIXER PNC 650235 ❑
- SCRAPER FOR 3.6LT CUTTER BOWL PNC 650236 ❑
- TRANSPARENT BOWL FOR 2,6LT CUTTER MIXER, MICROTOOTHED ROTOR, LID WITH SCRAPER PNC 650245 ❑

The company reserves the right to make modifications to the products without prior notice. All information correct at time of printing.

Food Processor
Cutter mixer 3.6 lt s/s bowl

Front

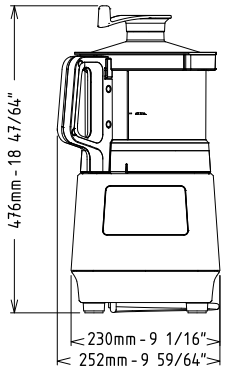

Side

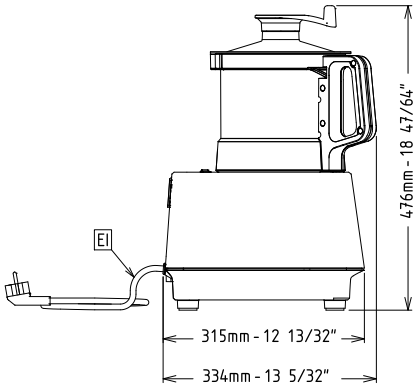

EI = Electrical inlet (power)

Top

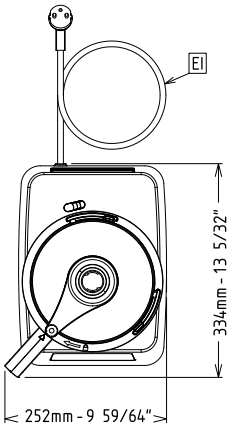

Electric	
Supply voltage:	220-240 V/1N ph/50 Hz
Electrical power max.:	0.5 kW
Total Watts:	0.5 kW
Capacity:	
Performance (up to):	0 kg/Cycle
Capacity:	3.6 litres
Key Information:	
External dimensions, Width:	252 mm
External dimensions, Depth:	334 mm
External dimensions, Height:	476 mm
Shipping weight:	18.1 kg
Net weight (kg):	13.5
Cold water paste:	
Egg whites:	

The company reserves the right to make modifications to the products without prior notice. All information correct at time of printing.

2026.06.16